FPFS-V37FS & FPFS V37-P7-55

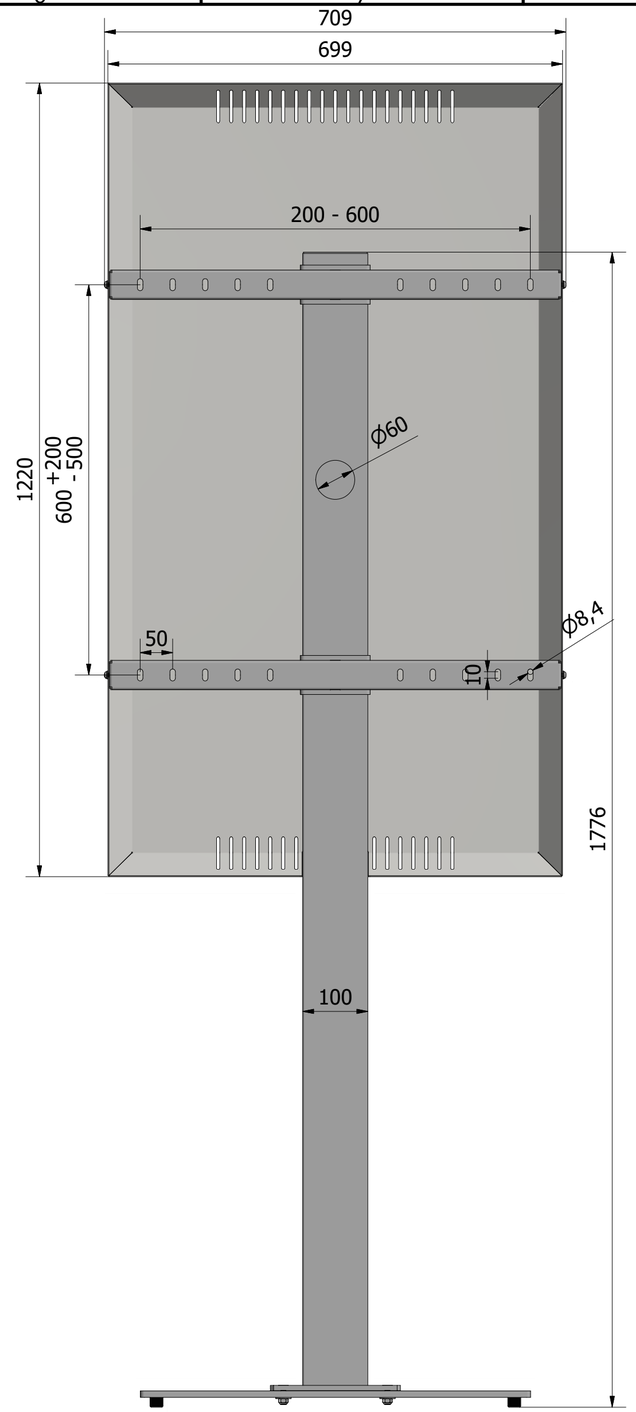

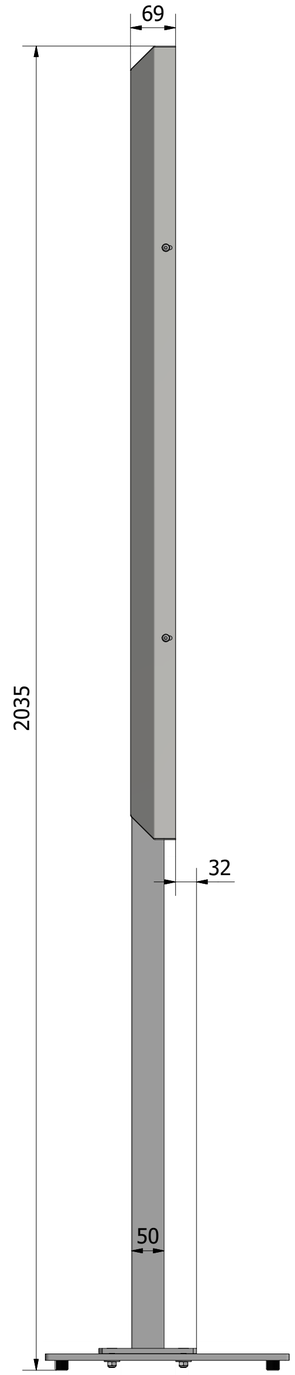

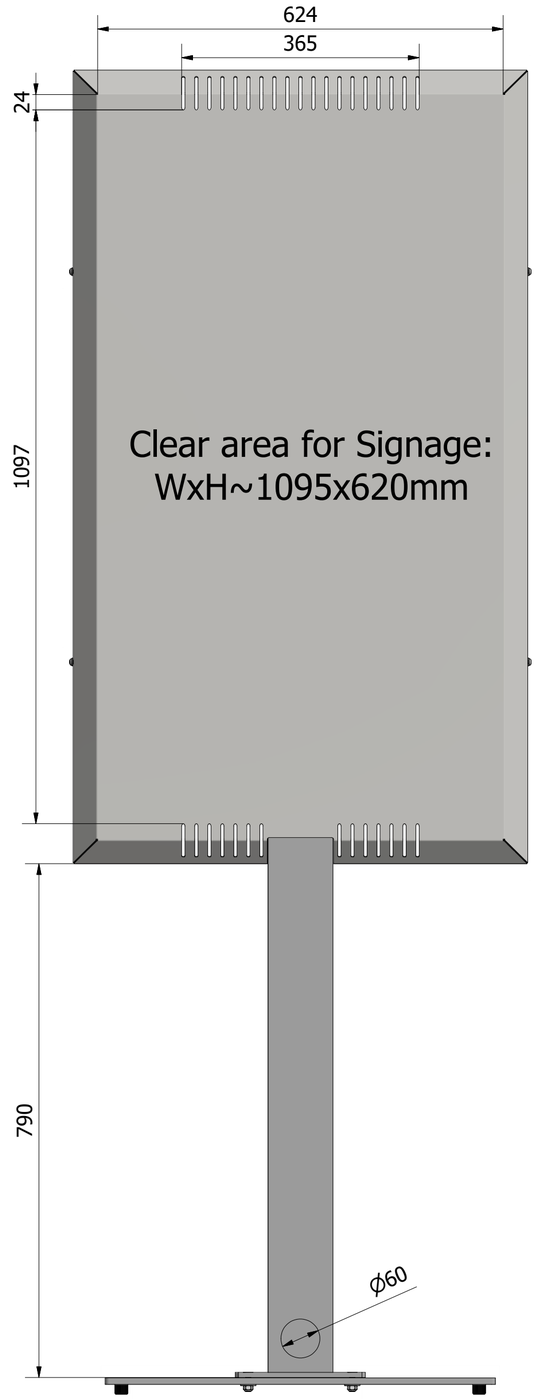

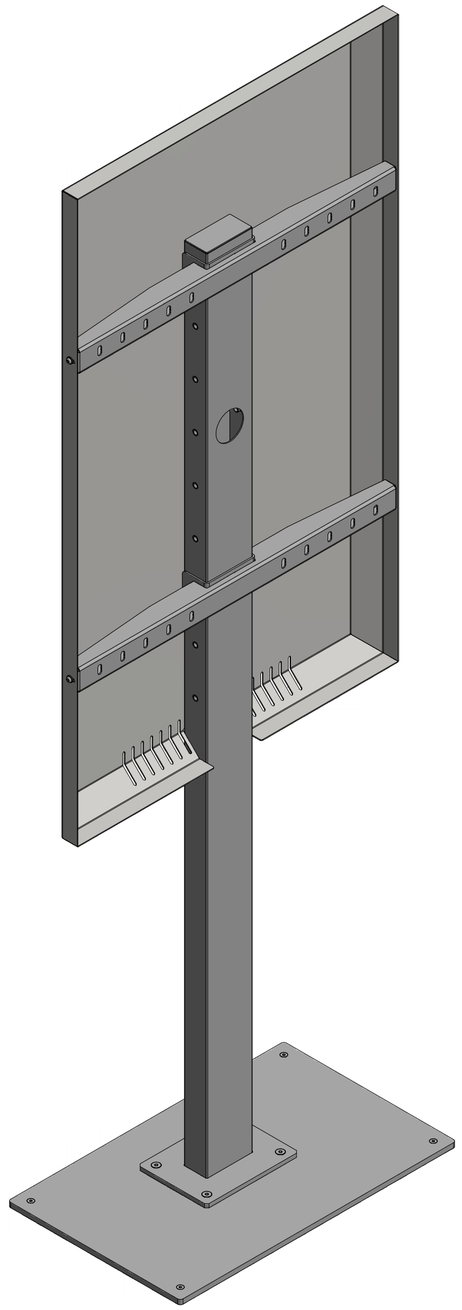

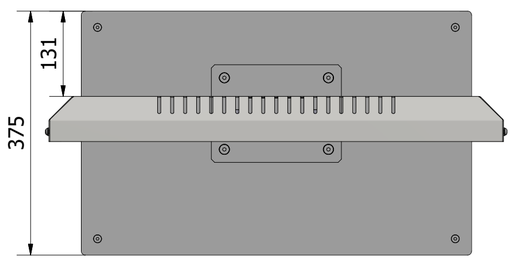

CATEGORY	FLAT PANEL FLOOR MOUNT	DRAWING TYPE	
MODEL	FPFS V37 FREE STANDING	DRAFT	FINAL
FEATURE	Max. Load capacity 40kg, Max. Vesa mount 800x600		X
COLOUR	POWDER COATING RAL9005 (BLACK BUFF)	REVISION	DATE
DRAWING No	V1.1.007012021-VK APPROVED BY:	NO	

unitech systems

ALL RIGHTS STRICTLY RESERVED. REPRODUCTION OR ISSUE TO THIRD PARTIES IN ANY FORM WHATEVER, IS NOT PERMITTED WITHOUT WRITTEN AUTHORITY FROM UNITECH SYSTEMS.